OMNIS NIR Analyzer

2.1070.0010 / 2.1071.0010 / 2.1072.0010

Manual

8.1072.8101EN / v7 / 2026-05-05

Metrohm

Metrohm AG
Ionenstrasse
CH-9100 Herisau
Switzerland
+41 71 353 85 85
info@metrohm.com
www.metrohm.com

OMNIS NIR Analyzer

Manual

8.1072.8101EN / v7 /
2026-05-05

Technical Communication
Metrohm AG
CH-9100 Herisau

This documentation is protected by copyright. All rights reserved.

This documentation is an original document.

This documentation has been prepared with great care. However, errors can never be entirely ruled out. Please send comments regarding possible errors to the address above.

Disclaimer

Deficiencies arising from circumstances that are not the responsibility of Metrohm, such as improper storage or improper use, etc., are expressly excluded from the warranty. Unauthorized modifications to the product (e.g. conversions or attachments) exclude any liability on the part of the manufacturer for resulting damage and its consequences. Instructions and notes in the Metrohm product documentation must be strictly followed. Otherwise, Metrohm's liability is excluded.

Trademark notice

ALTEF® is a registered trademark of ALTEFCO.

DUROPLAN® is a registered trademark of DWK Life Sciences.

Table of contents

1 Overview 1

1.1 Product description 1

1.2 Product versions 2

1.3 About the documentation 3

1.4 Further information 4

1.5 Displaying the accessories 4

2 Safety 5

2.1 Intended use 5

2.2 Responsibility of the operator 5

2.3 Requirements for operating personnel 6

2.3.1 Pacemakers and implanted defibrillators 6

2.4 Safety instructions 6

2.4.1 Danger from electrical potential 6

2.4.2 Danger from biological and chemical hazardous substances 7

2.4.3 Danger from highly flammable substances 7

2.4.4 Danger from leaking liquids 8

2.4.5 Danger during transport of the product 8

2.4.6 Liquid sample presentation – Dangers from hot surfaces and liquids 8

2.5 Design of warning messages 9

2.6 Meaning of warning signs 9

3 Functional description 11

3.1 Overview 11

3.1.1 Liquid sample presentation with accessories – Overview 13

3.1.2 Solid sample presentation – Overview 16

3.2 Function 17

3.3 System – Signals 20

3.4 Interfaces 21

4 Delivery and transport 22

4.1 Delivery 22

4.2 Packaging 22

4.3 Lifting and transporting the OMNIS NIR Analyzer 22

5 Installation 26

5.1 Installation by Metrohm ... 26

5.2 Setup location ... 26

5.3 Plugging in the power cord and the LAN cable ... 26

5.4 Start-up ... 29

6 Operation and control 30

6.1 Operation ... 30

6.2 Switching on and off ... 30

6.3 Liquid sample presentation ... 31

6.3.1 Inserting and removing the sample holder ... 32

6.3.2 Inserting and removing the sample vessel ... 33

6.4 Solid sample presentation ... 36

6.4.1 Inserting and removing the sample holder ... 37

6.4.2 Inserting and removing the sample vessel ... 37

7 Maintenance 39

7.1 Cleaning ... 39

7.2 Maintenance ... 43

7.2.1 Test and maintenance intervals ... 43

7.2.2 Replacing the lamp ... 45

8 Troubleshooting 54

8.1 Forcing a shutdown ... 54

9 Disposal 55

10 Technical specifications 56

10.1 Ambient conditions ... 56

10.2 Energy supply ... 57

10.3 Measurements and weight ... 58

10.4 Housing ... 58

10.5 Connectors ... 59

10.6 Display specifications ... 60

10.7 Operation ... 60

10.8 Spectrometer specifications ... 60

1 Overview

1.1 Product description

The OMNIS NIR Analyzer is a dispersive NIR spectrometer. The instrument measures the absorption of near-infrared light in a wavelength range from 1,000 to 2,250 nm. The absorption can be visualized as an absorption spectrum, depending on the wavelength.

The OMNIS NIR Analyzer can be placed on a table. The instrument is connected to the energy supply and the Ethernet network.

Liquid sample presentation

The liquid sample presentation is part of the **OMNIS NIR Analyzer Liquid/Solid** and **OMNIS NIR Analyzer Liquid** instruments. The measuring principle of transmission in the near-infrared wavelength range is used for liquid sample presentation.

The temperature of the sample holder can be regulated. The temperature of the sample can also be controlled for disposable vials. The maximum temperature is 80 °C in each case.

Liquid sample presentation can be used to measure liquids that are transparent in the NIR range and that absorb the individual wavelengths to different degrees, depending on their composition.

Substances that are opaque in the visible range can be transparent in the NIR range, and vice-versa.

Solid sample presentation

The solid sample presentation is part of the **OMNIS NIR Analyzer Liquid/Solid** and **OMNIS NIR Analyzer Solid** instruments. The measurement principles of reflection and transflection in the near-infrared wavelength range are used for solid sample presentation.

The following sample types can be measured with solid sample presentation:

- Powder
- Coarse solids/granulates
- Solids/coatings/paper
- High-viscosity liquids

OMNIS Software

The OMNIS NIR Analyzer is integrated in the OMNIS platform. This enables the seamless operation of complementary technologies such as spectro-

scopy and titration. The OMNIS Software runs on an external computer, controls the instruments, and evaluates the measured absorption spectra.

The OMNIS Software analyses the measured absorption spectra using a previously created model. The following analyses are possible, depending on the model:

- **Quantification**: Numerical determination of chemical or physical sample properties.
  Result: Predicted value of the parameter of interest, e.g., the concentration of a substance.
- **Identification**: Determination of the identity of an unknown sample
  Result: Determined product.
- **Verification**: Confirmation of the expected product membership of a sample (from OMNIS Software version 4.2).
  Result: The sample can be assigned to the expected product (yes/no).
- **Qualification**: Ensure that the quality of the sample meets the requirements (from OMNIS Software version 4.4)
  Result: The sample corresponds to the quality of the calibration samples with which the qualification model was created (yes/no).

1.2 Product versions

The product is available in the following versions:

Table 1 Product versions

Instrument	Article number	Designation	Version feature
	2.1070.0010	OMNIS NIR Analyzer Liquid	▪ Liquid sample presentation
	2.1071.0010	OMNIS NIR Analyzer Solid	▪ Solid sample presentation

Instrument	Article number	Designation	Version feature
	2.1072.0010	OMNIS NIR Analyzer Liquid/Solid	▪ Solid sample presentation ▪ Liquid sample presentation

All OMNIS NIR Analyzer Liquids and OMNIS NIR Analyzer Solids can be upgraded to a OMNIS NIR Analyzer Liquid/Solid.

Information on function licenses and software licenses is available on the *Metrohm website* or from the regional Metrohm representative.

The article number and serial number for identification of the product can be found on the type label:

1	**(01) = Article number in accordance with GS1 standard**	**2**	**(21) = Serial number**
3	**(240) = Metrohm article number**		

1.3 About the documentation

Possible depictions in the documentation:

(**1**)	Reference to position number in the figure
1	Instruction step
Method	Parameters, menu items, tabs, and dialogs
Processes ▶ Operating procedures	Menu path
[Continue]	Button or key
ℹ	Supplementary information to the descriptive text

1.4 Further information

Additional information on the product is available on the following pages:

- Metrohm website *https://www.metrohm.com* – Overview of product family, documents as PDF, details of accessories, and information on applications.
- Help for the OMNIS Software *https://guide.metrohm.com* – Thematically filtered information on OMNIS Software.

1.5 Displaying the accessories

Up-to-date information on the scope of delivery and on optional accessories can be found on the Metrohm website.

1 Searching for a product on the website

- Go to *https://www.metrohm.com*.
- Click on 🔍.
- Enter the article number of the product into the search field and press **[Enter]**.
  - Article number: See *Product versions, chapter 1.2, page 2*
- In the result list, click on the desired product.

Detailed information regarding the product is displayed.

2 Displaying the accessories

- Scroll down (accessories subject to availability):
  - Included parts
  - Optional parts

3 Downloading the accessories list (included and optional parts)

- Click on ⬇ to download the accessories list as a PDF.

ℹ Metrohm recommends keeping the downloaded PDF for reference purposes.

2 Safety

2.1 Intended use

The OMNIS NIR Analyzer is suitable for spectroscopic analysis of a wide range of samples, i.e., chemicals, plastics, oils, pharmaceuticals, foods, and agricultural products.

If the instrument has a solid sample presentation, then solids can be analyzed. If the instrument has a liquid sample presentation, then liquids can be analyzed. Liquids in disposable vials can be brought to a defined temperature prior to measurement.

The instrument is designed for indoor use, typically in laboratories or manufacturing sites (incoming goods inspection, at-line or offline monitoring).

2.2 Responsibility of the operator

The operator must ensure that the basic national and international regulations on occupational safety and accident prevention in chemical laboratories are observed. The operator has the following responsibilities:

- Instruct personnel in the safe handling of the product.
- Train personnel in the use of the product according to the user documentation (e.g. install, operate, clean, eliminate faults).
- Train staff on basic occupational safety and accident prevention regulations.
- Provide personal protective equipment (e.g. protective glasses, gloves).
- Provide suitable tools and equipment to execute the work safely.
- Ensure compliance with applicable laws, regulations and standards.

The product may be used only when its status is perfect. The following measures are required to ensure the safe operation of the product:

- Check the condition of the product before use.
- Remedy defects and malfunctions immediately.
- Maintain and clean the product regularly.

2.3 Requirements for operating personnel

Only qualified personnel may operate the product. Qualified personnel are persons who meet the following requirements:

- Basic regulations on occupational safety and accident prevention for chemical laboratories are known and complied with.
- Knowledge of handling hazardous chemicals is present. Personnel have the ability to recognize and avoid potential dangers.
- Knowledge regarding the application of fire prevention measures for laboratories is available.
- Safety-relevant information is communicated and understood. The personnel can operate the product safely.
- The user documentation has been read and understood. The personnel operate the product according to the instructions in the user documentation.

2.3.1 Pacemakers and implanted defibrillators

Danger to life for wearers of pacemakers and implanted defibrillators.

Permanent magnets are installed in the instrument and in the sample holders for liquid samples. The magnets can affect the function of pacemakers and implanted defibrillators. A pacemaker can be switched to test mode and cause discomfort. A defibrillator may no longer function.

- Keep the instrument and sample holder for liquid samples at least 15 cm (6 in.) away from implanted medical devices.

2.4 Safety instructions

2.4.1 Danger from electrical potential

Contact with electrical potential can cause serious injuries or death. To avoid danger from electrical potential, observe the following:

- Operate the product only if it is in perfect condition. The housing must also be intact.
- Use the product only with the coverings mounted. If covers are damaged or missing, disconnect the product from the energy supply and contact the regional Metrohm service representative.
- Protect live components (e.g., power supply unit, power cord, connection sockets) against moisture.
- Always have maintenance work and repairs on electrical components carried out by a regional Metrohm service representative.

- Disconnect the product from the energy supply immediately if at least one of the following cases occurs:
  - The housing is damaged or open.
  - Live parts are damaged.
  - Moisture penetrates.

To disconnect the product from the energy supply, pull the power plug.

2.4.2 Danger from biological and chemical hazardous substances

Contact with biological hazardous substances may cause poisoning from toxins or infections from microorganisms. Contact with aggressive chemical substances may cause poisoning or chemical burns. To avoid danger from biological or chemical hazardous substances, observe the following:

- Label the product according to regulations if it is used for substances that have a potential for chemical hazards and are generally subject to the Hazardous Substances Ordinance.
- Wear personal protective equipment (e.g. protective glasses, gloves).
- Use exhaust equipment when working with vaporizing hazardous substances.
- Dispose of hazardous substances in accordance with regulations.
- Clean and disinfect contaminated surfaces. The drainage tubing as well for the liquid sample presentation.
- Only use cleaning agents that do not cause any unwanted side reactions with the materials to be cleaned.
- Dispose of chemically contaminated materials (e.g. cleaning material) in accordance with regulations.
- Proceed as follows in case of a return shipment to Metrohm AG or a regional Metrohm representative:
  - Decontaminate the product or product component. The drainage tubing as well for the liquid sample presentation.
  - Remove the labeling for hazardous substances.
  - Create a declaration of decontamination and enclose it with the product.

2.4.3 Danger from highly flammable substances

Using highly flammable substances or gases may cause fires or explosions. To avoid danger from highly flammable substances, observe the following:

- Avoid ignition sources.
- Use protective grounding.
- Use exhaust equipment.

2.4.4 Danger from leaking liquids

Leaking liquids may cause injuries and may damage the product. To avoid danger from leaking liquids, observe the following:

- Check the product and its accessories at regular intervals for leakages and loose connections.
- Remove and dispose of escaping liquids in accordance with regulations.
- If you suspect that liquid has penetrated the instrument, disconnect the instrument from the energy supply. Then have the instrument checked by a regional Metrohm service representative.
- When using flow-through cells:
  - Replace leaking components and connecting elements without delay.
  - Tighten loose connecting elements.
  - Do not loosen or remove tubing connections under pressure.
  - Carefully pull the tubing ends out of the vessels.
  - Carefully allow liquids from the tubing to drain into suitable vessels.

2.4.5 Danger during transport of the product

Chemical or biological substances may be spilled during the transport of the product. Parts of the product may fall down or may be damaged. There is a risk of injury from chemical or biological substances and pieces of broken glass. To ensure safe transport, observe the following:

- Remove loose parts (e.g., sample holders, sample vessels) before transport.
- Remove liquids, if necessary.
- Lift the product with both hands on the base plate *(see "Lifting and transporting the OMNIS NIR Analyzer", chapter 4.3, page 22)*.
- Transport the product: According to *Lifting and transporting the OMNIS NIR Analyzer, chapter 4.3, page 22*

2.4.6 Liquid sample presentation – Dangers from hot surfaces and liquids

Contact with hot surfaces or hot liquids may cause burns. To avoid the risk of injury, observe the following:

- Wear heat-resistant protective gloves.
- Clean up spilled liquids and solids immediately.

2.5 Design of warning messages

The present documentation uses warning messages as follows.

Structure

1. Severity of the danger (signal word)
2. Type and source of danger
3. Consequences of disregarding the danger
4. Measures for averting the danger

Hazard levels

Signal color and signal word designate the hazard level.

DANGER

Indicates an immediate danger. It will result in serious injuries or death if not avoided.

WARNING

Indicates a potential danger. Failure to avoid the danger may result in death or serious injury.

CAUTION

Indicates a potential danger. If not avoided, it may result in light or minor injuries.

NOTICE

Indicates a potentially damaging situation. If not avoided, the product or something in the surrounding area could be damaged.

2.6 Meaning of warning signs

Warning signs on the product or in the documentation indicate potential dangers or draw attention to certain behaviors in order to avoid accidents or damage.

Depending on the application purpose, the operating company attaches additional warning signs to the product. The corresponding instructions of the operator must be followed.

Table 2 Warning signs according to ISO 7010 (examples)

Warning signs / meaning		Warning signs / meaning	
	General warning sign		Warning of hot surface
	Warning of sharp object (cut/ puncture)		Warning of hand injuries (crushing)
	Warning of electrical voltage		Warning of corrosive substances
	Warning of optical radiation		Warning of a laser beam
	Warning of flammable materials		Warning of biological hazard
	Warning of toxic materials		

3 Functional description

3.1 Overview

Different product versions are available *(see "Product versions", chapter 1.2, page 2)*.

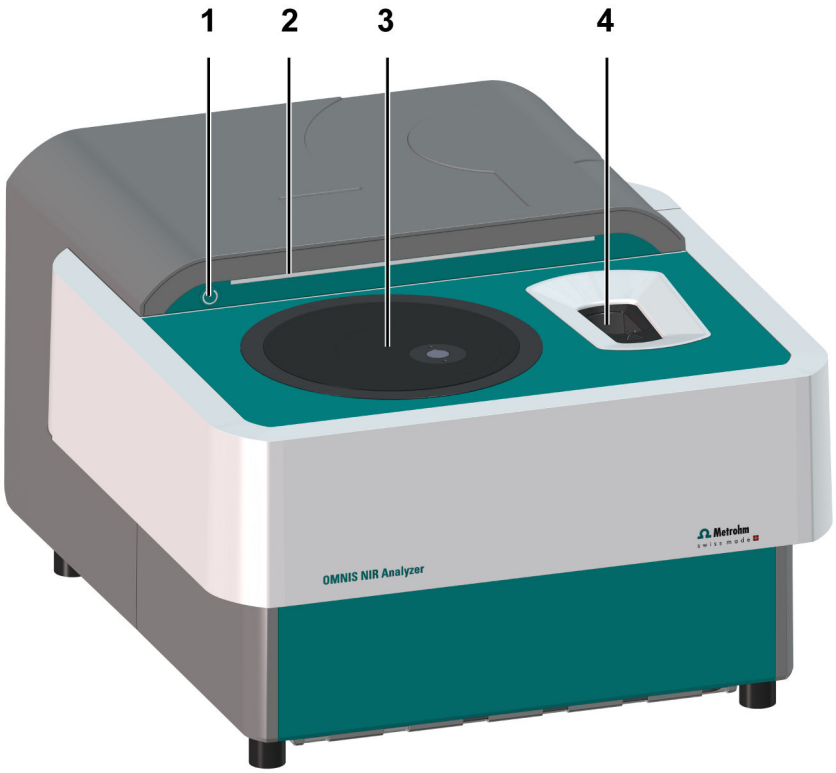

Figure 1 OMNIS NIR Analyzer – Front

1	**On/off switch**	**2**	**Status display**
3	**Solid sample presentation**	**4**	**Liquid sample presentation**

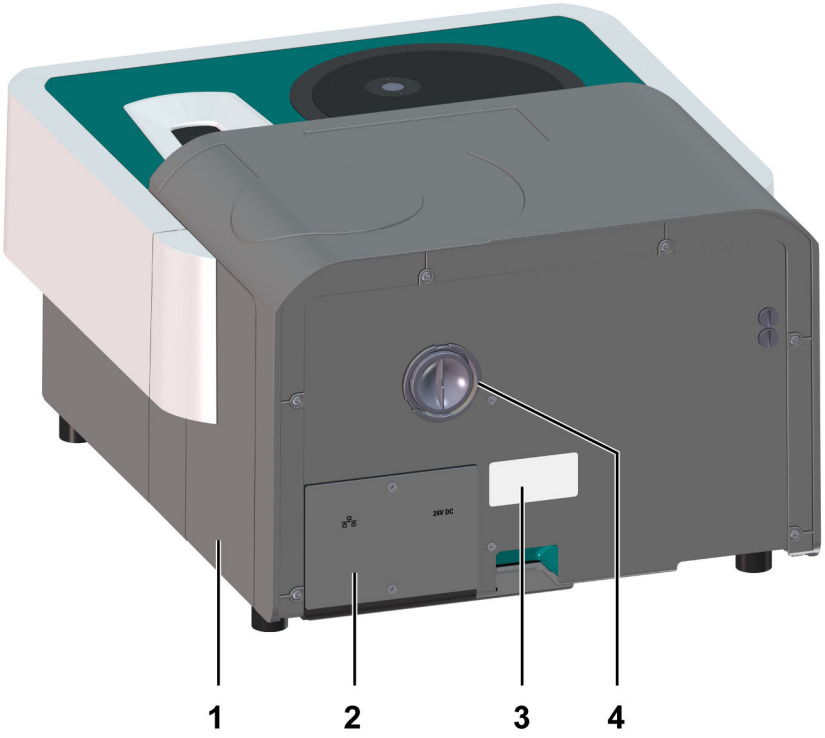

Figure 2 OMNIS NIR Analyzer – Rear

1	**Side plate** Open only to replace the lamp OMNIS NIR *(see "Replacing the lamp", chapter 7.2.2, page 45)*.	**2**	**Interfaces** *(see "Interfaces", chapter 3.4, page 21)*
3	**Type label**	**4**	**Access for removal of the filter slider** For transport over long distances *(see "Lifting and transporting the OMNIS NIR Analyzer", chapter 4.3, page 22)*.

3.1.1 Liquid sample presentation with accessories – Overview

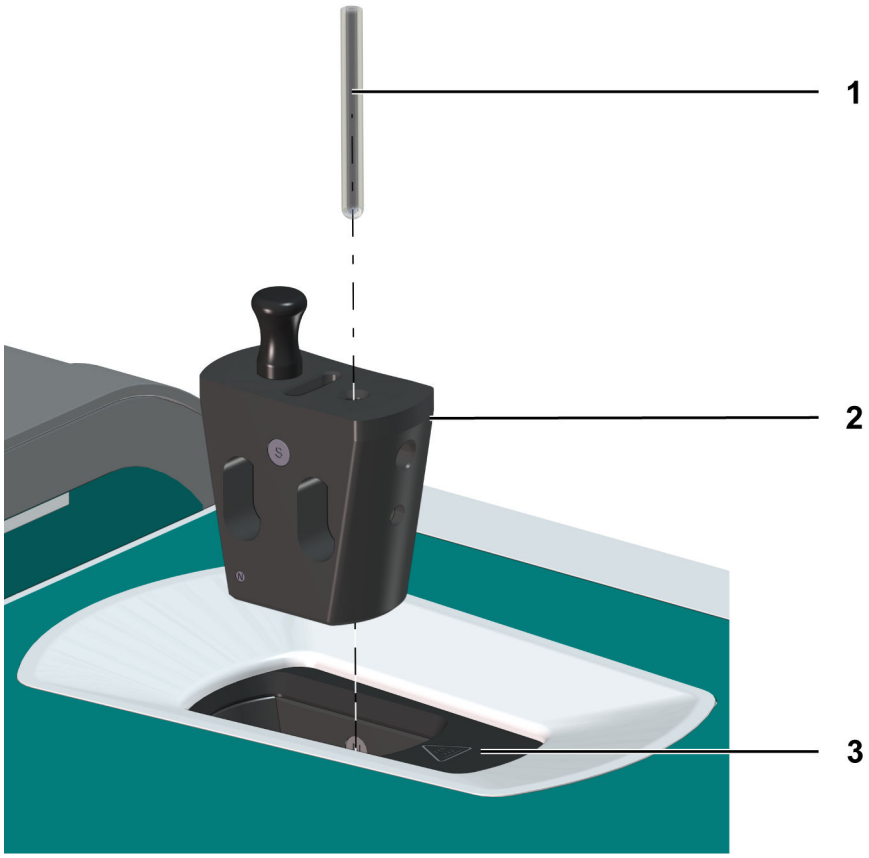

Figure 3 Liquid sample presentation with accessories

1	**Sample vessel**	**2**	**Sample holder**
3	**Liquid sample presentation**		

Liquid sample presentation

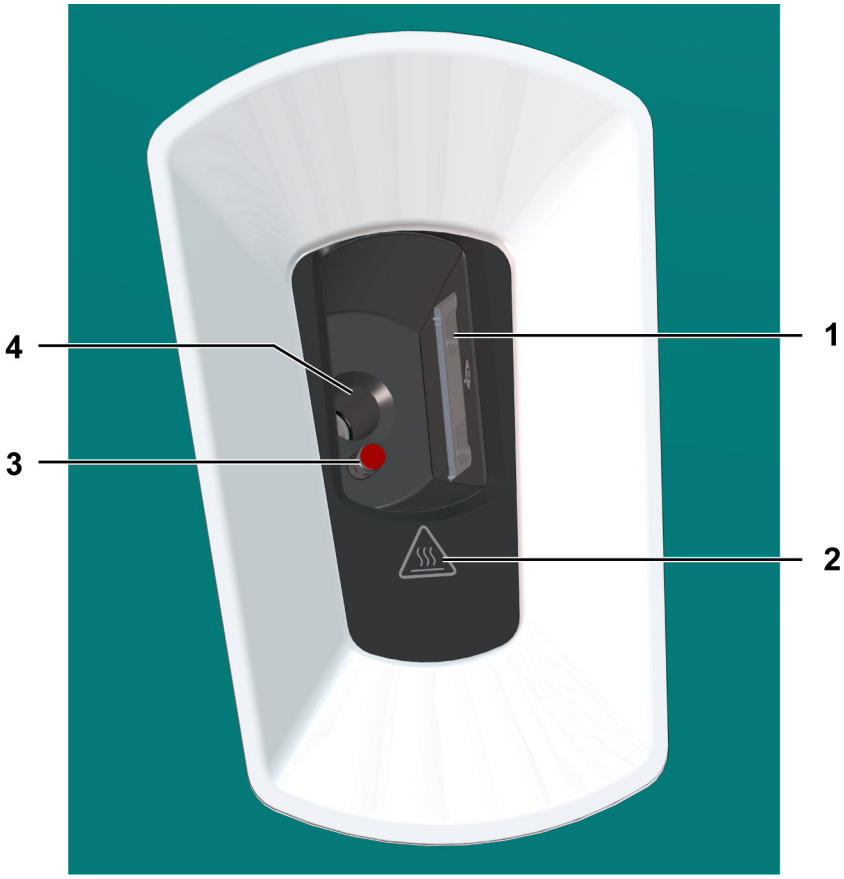

Figure 4 Liquid sample presentation

1	**Sampling window (both sides)**	**2**	**Warning of hot surface**
3	**Sensor for sample vessel detection**	**4**	**Drain for spilled liquids**

Sample vessel detection: The emission of the sensor is below the limit values and is harmless to the human eye.

Sample holder

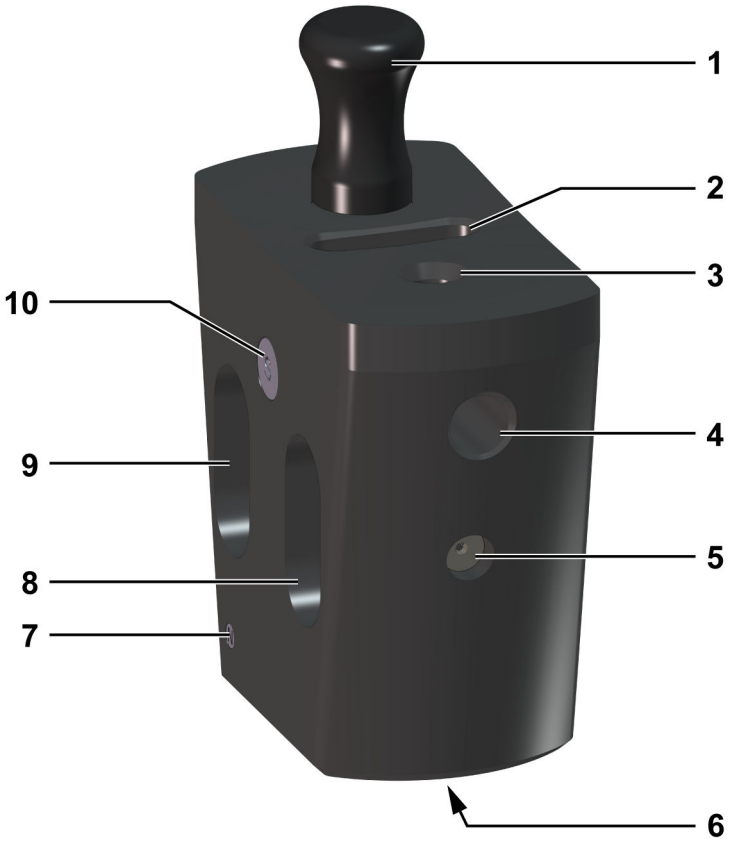

Figure 5 Sample holder (example for vials)

1	**Handle**	**2**	**Drain for spilled liquids (outlet on underside)**
3	**Opening für sample vessel (example for vial 2 mm)**	**4**	**Opening for temperature sensor**
5	**Vial lock (only for vials)**	**6**	**Opening for sample vessel detection**
7	**Sample holder identification (different number of magnets)**	**8**	**Light path with sample**
9	**Light path without sample (reference signal)**	**10**	**Magnet for positioning the sample holder**

3.1.2 Solid sample presentation – Overview

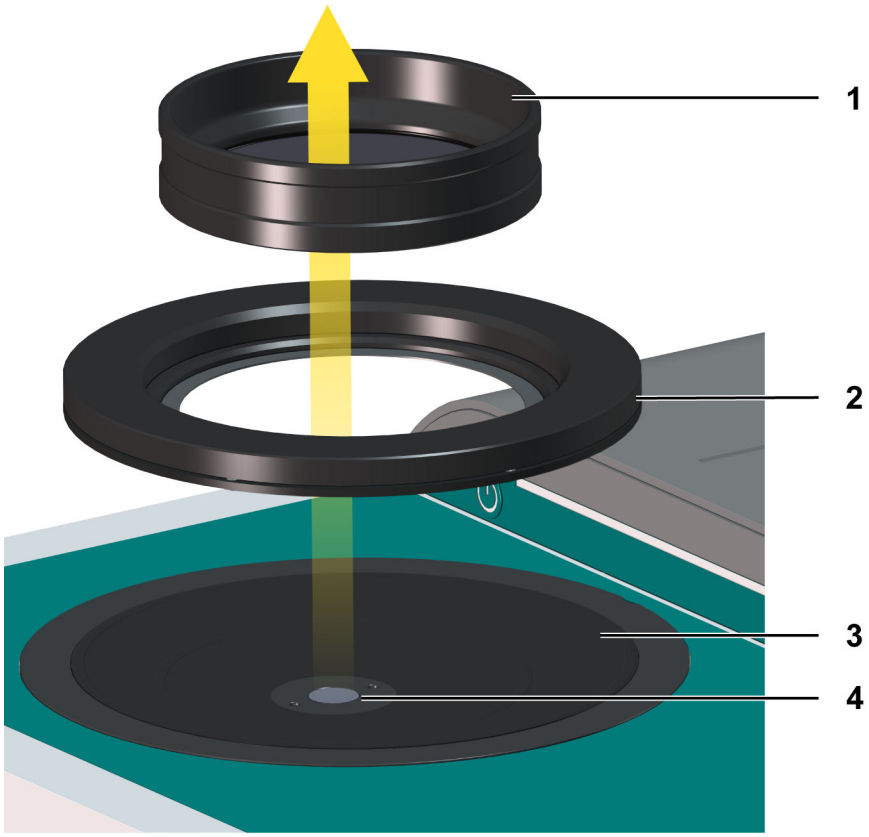

Figure 6 Solid sample presentation with accessories

1	**Sample vessel**	**2**	**Sample holder**
3	**Solid sample presentation**	**4**	**Sampling window (light emission opening)**

Invisible optical radiation is emitted uninterruptedly from the sampling window (**4**).

3.2 Function

The OMNIS NIR Analyzer measures light intensities in the near-infrared wavelength range. The light absorbed by the sample is determined from a measurement without sample and a measurement with sample.

Absorbance serves as a measure of absorption. The absorption spectrum represents absorbance as a function of the wavelength.

Overview

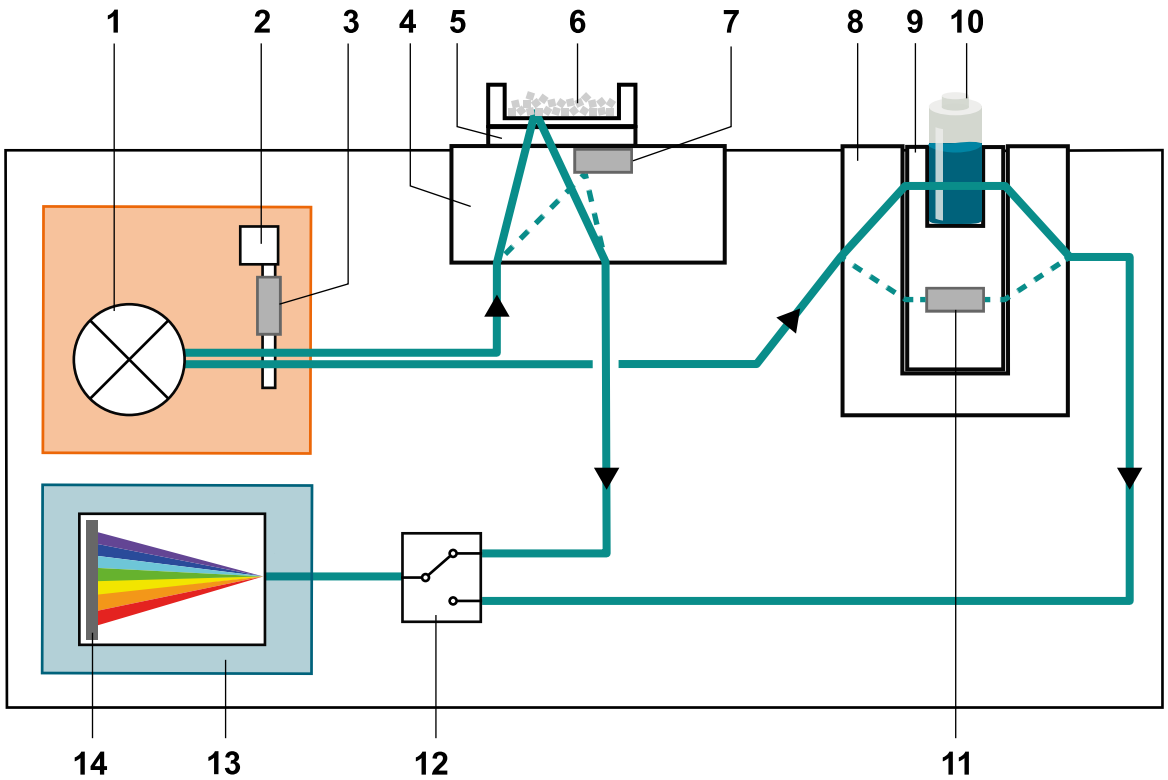

During operation, the light is guided from the light source via the sample to the detector.

Light source

A tungsten halogen lamp (**1**) constantly emits a high light intensity across the wavelength range being used.

A filter slider (**2**) enables optical filters to be positioned in the optical path. During wavelength calibration, the filter slider brings the internal wavelength reference (**3**) into the optical path.

The light is transmitted to the sample presentation via the fiber cable.

Solid sample presentation

Solid sample presentation (**4**) is suitable for measuring diffusely scattering or opaque materials. The measurement is carried out in reflection mode. Part of the incident light is reflected by the sample, the other part of the incident light is absorbed by the sample.

The sample holder (**5**) is interchangeable so that different types of sample vessels can be used. Measurement without a sample vessel and sample holder, e.g. for paper, is also possible.

The sample vessel (**6**) is placed on the sample holder. The following measuring modes are available:

- **Single-point measurement**: The instrument performs a measurement at a position.
- **Multi-point measurement**: The following two modes are available:
  - **Five-point measurement**: The instrument performs measurements at 5 different positions. After each measurement, the sample holder is rotated to the next position.
  - **Continuous measurement** (from OMNIS Software version 4.7): The instrument measures continuously while the sample holder rotates.

Alternatively, the samples can be measured in a transflection vessel in transflection measuring mode. The light passes through the sample, is reflected by a reflector, and then passes through the sample once again.

A referencing mechanism enables measurement without a sample. The light is reflected by the internal NIR reflection standard (**7**). The reference signal obtained in this way is required to calculate the absorption of the sample.

Liquid sample presentation

The liquid sample presentation (**8**) is suitable for measuring liquid materials that are transparent in the NIR range. The measurement is carried out in transmission measuring mode. Part of the incident light passes through the sample, the other part of the incident light is absorbed by the sample.

The sample holder (**9**) is interchangeable so that different types of sample vessels can be used. The sample holder identification determines the type of sample holder used. The OMNIS Software uses this to check whether the defined sample holder is being used.

The sample vessel (**10**) is inserted into the sample holder. The sample vessel detection ensures that a sample vessel is inserted in the sample holder.

A referencing mechanism enables measurement without a sample. The light is thereby guided through air (**11**) as the reference material instead

of the sample. The reference signal obtained in this way is required to calculate the absorption of the sample.

The temperature control regulates the temperature, either in the sample holder or in the sample itself.

Temperature control in the sample holder

- Supports sample holders for disposable vials, cuvettes, and flow-through cells.
- Target temperature in the sample holder: Between 25 °C and 80 °C (not lower than 5.0 K below the ambient temperature).
- Accuracy of the temperature sensors: < 0.5 K

Temperature control in the sample

- Support for disposable vials.
- Target temperature of the sample: Between 25 °C and 80 °C (not lower than 5.0 K below the ambient temperature).
- Accuracy of the temperature sensors: < 0.5 K
- Control algorithm:
  - The control algorithm takes into account the defined target temperature of the sample and the measured temperatures at the sensors. The spectroscopic measurement can start once the modeled temperature in the sample is achieved with sufficient stability and does not deviate more than 0.5 K from the target temperature. It is possible that the spectroscopic measurement will begin shortly after the disposable vial has been inserted.
  - Typical accuracy: 1.0 K (checked in water samples for sample temperatures of 25 °C to 80 °C at an ambient temperature of 23 °C).

The temperature control can be switched on and off in the OMNIS Software. The temperature control is stopped automatically if the target temperature is not reached within 120 minutes or if no sample is measured.

Detector

After interaction with the sample, the remaining light reaches the actual spectrometer (**13**) via the fiber cable. If the instrument has 2 sample presentations, then an optical switch (**12**) will select the suitable optical path.

The temperature stabilization of the spectrometer reduces thermal deviations and improves the stability of the measurements. In the spectrometer, a diffraction grating splits the light into discrete wavelengths. In the detector (**14**), the different wavelengths hit different pixels of a photodetector. The photodetector (InGaAs sensor) converts the incident light into electrical signals.

The instrument determines the absorption spectrum of the sample from the measured signals (with sample) and the corresponding reference signals (without sample).

3.3 System – Signals

System components with status indicators show their operating status with colors and/or flashing patterns. The meaning of the colors and flashing patterns is explained in the following table.

Visual signal		Meaning
	LED lights up yellow.	System start or initialization
	LED flashes yellow (slowly).	Ready for connection setup or locking
	LED flashes yellow (fast).	Connection setup started or locking underway
	LED lights up green.	Ready for operation
	LED flashes green (slowly).	In operation
	LED flashes red (fast).	Malfunction or error

Some system components only use part of the explained flashing patterns.

3.4 Interfaces

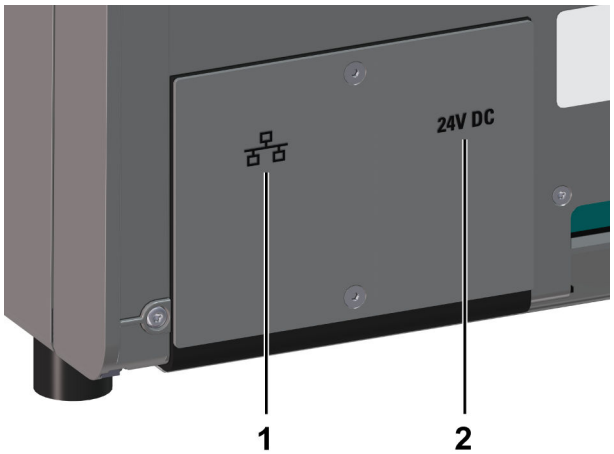

Figure 7 OMNIS NIR Analyzer – Interfaces and connectors (rear of the instrument with cable connection plate)

1	**LAN connector** Connection socket for a connecting cable to the local network (LAN = Local Area Network)
2	**Power connection** Connection socket for the energy supply

To connect the cables, unscrew the cable connection plate *(see "Plugging in the power cord and the LAN cable", chapter 5.3, page 26)*.

4 Delivery and transport

4.1 Delivery

Inspect the delivery immediately upon receipt:

- Check the delivery against the delivery note to ensure completeness.
- Check the product for damage.
- If the delivery is incomplete or damaged, contact your regional Metrohm representative.

4.2 Packaging

The product and accessories are supplied in protective special packaging. Keep this packaging to ensure safe transportation of the product. If a transport locking device is present, keep this as well for future reuse.

4.3 Lifting and transporting the OMNIS NIR Analyzer

CAUTION

Improper lifting

Risk of injury from falling instrument. The side plate can come loose while holding onto the white cladding.

Back injuries due to underestimating the weight.

- Before lifting:
  - Switch off the instrument. Loosen all connections and cables.
  - Remove sample vessels and sample holders.
  - Note the weight in the technical specifications.
- Do not hold onto the white cladding.
- To move or lift the instrument, hold it by the center of the base plate on both sides.

Lifting at the base plate

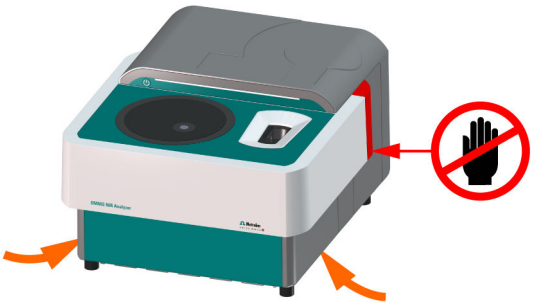

Transport within the building or company premises

Required accessories

- Transport trolley

1 Disconnecting the instrument from the energy supply

- Switch off the instrument.
- Unplug the power cord.

2 Transport

- Remove loose parts (e.g., sample holders, sample vessels) before transport.
- Remove liquids, if necessary.
- Lift the instrument with both hands on the base plate and place it on the transport trolley.

3 Wavelength calibration and system performance tests

- After transport, perform the wavelength calibration and the system performance tests.

Transport over long distances

Required accessories

- Original packaging
- Separate packaging for filter slider, lamp, and lamp housing with fan

Prerequisite

- The instrument is reserved in the OMNIS Software under **Equipment** ▶ **Instruments**.

1 Preparing the filter slider for removal

- Double-click on the instrument in the OMNIS Software under **Equipment** ▶ **Instruments** to open the manual control.
- Move the filter slider to the replacement/transport position: (starting with OMNIS Software version 4.7)

2 Disconnecting the instrument from the energy supply

- Switch off the instrument.
- Unplug the power cord.

3 Remove the filter slider and package it separately

CAUTION

Hot filter slider

Risk of burns due to contact with hot filter slider.

- After switching off the instrument, wait 15 minutes to allow the filter slider to cool down.

NOTICE

Fingerprints on the filter

The filters can be impaired by fingerprints and greasy deposits.

- Do not touch the filters in the filter holder with your fingers.

The IP degree of protection of the instrument is removed by performing the following steps.

- Rotate the lid on the rear of the instrument by approx. 45° counterclockwise and remove it.

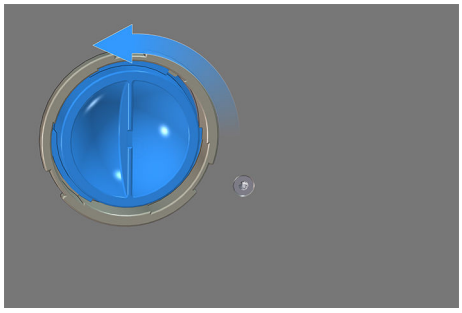

- Pull out the filter slider and package it separately.

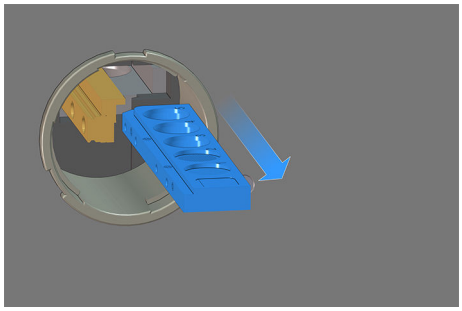

- Replace the lid and rotate it clockwise by approx. 45°.

4 Remove the lamp and lamp housing with fan and package them separately

CAUTION

Risk of injury when removing the lamp

- Remove the lamp and lamp housing with fan according to *Replacing the lamp, chapter Replacing the lamp, page 45*.

- Reattach the side plate.

5 Transport

- Remove loose parts (e.g., sample holders, sample vessels) before transport.
- Remove liquids, if necessary.
- Lift the instrument with both hands on the base plate when packaging.
  Package the filter slider, lamp, and lamp housing with fan separately.

6 Start-up by the regional Metrohm service representative

- After transport, assembly and start-up of the instrument must be performed by the regional Metrohm service representative *(see "Start-up", chapter 5.4, page 29)*.

5 Installation

5.1 Installation by Metrohm

Installation and start-up of the system is always carried out by the regional Metrohm service representative.

5.2 Setup location

The product is suitable only for operation indoors and may not be used in explosive environments.

The following requirements apply to the setup location:

- The room is well-ventilated and protected against both direct sunlight and excessive temperature fluctuations.
- The setup space is stable and free of vibrations. The setup space must be suitable for the dimensions and weight of the components (see Technical specifications).
- A minimum clearance of 10 cm from walls and other instruments must be maintained on all 4 sides.
- All cables and connectors are accessible during operation. The cables are safely installed (no tripping hazards).
- The workplace is ergonomically designed and ensures trouble-free operation of the product.

5.3 Plugging in the power cord and the LAN cable

WARNING

Health hazards from electrical potential.

Severe injuries with possibly fatal consequences.

- Operate the product only if it is in perfect condition. The housing must also be intact.
- Only use the product with the covers fitted.
- Protect live components (e.g. power supply unit, power cord, connection sockets) against moisture.
- Always have maintenance work and repairs on electrical components carried out by a regional Metrohm service representative.

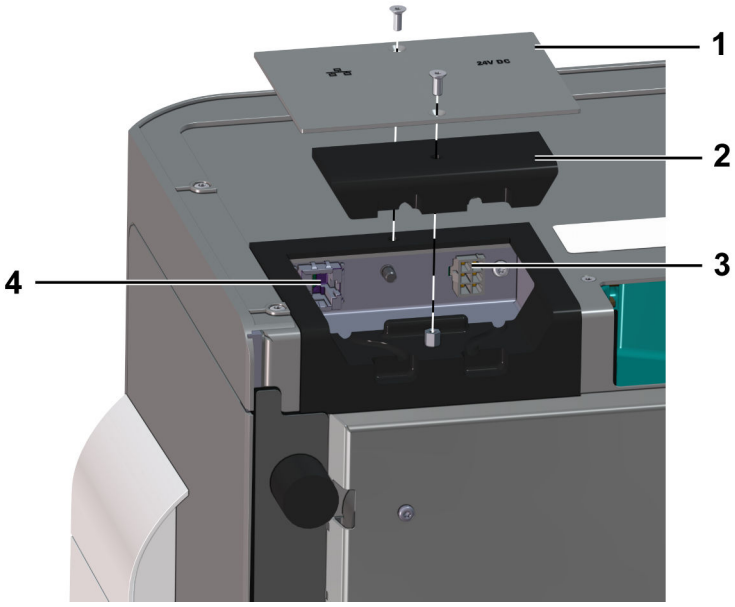

Figure 8 OMNIS NIR Analyzer – Bottom side

1	**Cable connection plate**	**2**	**Cable connection seal**
3	**Power supply connection socket**	**4**	**LAN connection socket**

The cable connections are protected against inward seepage of dust and splash water.

Required accessories:

- Hex key 2.0 mm
- LAN cable
- Power supply unit 24 V, 230 W with:
  - Connection cable on the instrument side
  - Connector plug on the mains side IEC 60320, type C14, 10 A
- Power cord:
  - Length: max. 2 m
  - Number of conductors: 3, with protective ground
  - Conductor cross-section: 3 × min. 1.0 mm^2 / 18 AWG
  - Coupling: IEC 60320, type C13, 10 A
  - Power plug: 6.2122.XX0 (according to customer requirement), min. 10 A

1 Opening the access to cable connections

- Unscrew the cable connection plate (**1**) using a 2.0 mm hex key.
- Remove the cable connection seal (**2**).

2 Connecting the LAN cable and the power supply unit

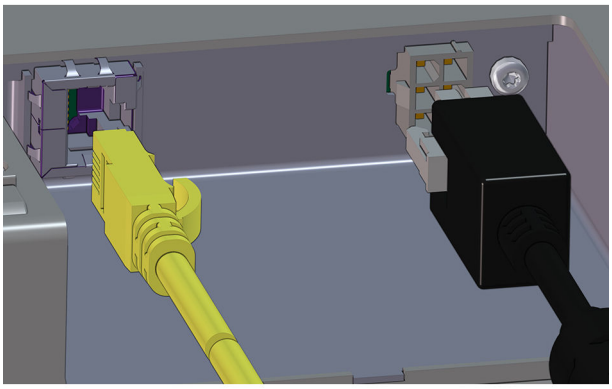

- Plug the LAN cable (colored yellow in the picture) into the LAN connection socket.
- Plug the power supply unit connection cable (colored black in the picture) on the instrument side into the power supply connection socket.

3 Closing the access to cable connections

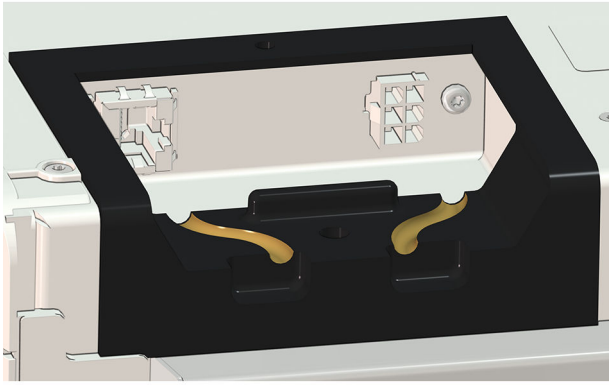

- Insert the LAN cable into the recess (colored yellow in the picture).
- Insert the power supply unit connection cable into the recess (colored yellow in the picture).
- Attach the cable connection seal.
- Attach and screw on the cable connection plate.

4 Establishing connections

- Connect the LAN cable to the LAN.
- Connect the power cord to the power supply unit and to the energy supply. Use only permitted power cords.

To power down the product, disconnect the power cord from the energy supply.

5.4 Start-up

Start-up is a documented process that ensures that the instrument fulfils the predefined specifications. The regional Metrohm service representative will carry out the following mandatory steps on site:

1. Wavelength calibration for each sample presentation
2. For solid sample presentation:
   a. SPS adjustment (requires special service tool)
   b. Mandatory for regulated industries: Linear correction (requires the external standard 6.0741.0030 OMNIS NIR Reflection)
3. **Instrument calibration and validation**
   The prescribed validations and, if necessary, calibrations must be carried out according to the procedure developed by Metrohm AG. A calibration certificate is then issued which is available to the customer on request.

6 Operation and control

6.1 Operation

The OMNIS NIR Analyzer is operated using the OMNIS Software. Additional information under *https://guide.metrohm.com*.

6.2 Switching on and off

NOTICE

Data loss

Disconnecting OMNIS instruments from the power grid (e.g. with a connector strip) may lead to irreversible data loss. If the instrument can no longer be used, contact your regional Metrohm service representative.

- Press the on/off switch for 2 seconds to safely shut down the instrument.
- Wait until the status display goes out and only then disconnect the electricity.

1 Switching on the OMNIS main instrument

Press the on/off switch for 1 second.

- The status display lights up in yellow: The start process is running.
- The status display flashes yellow: The instrument can be reserved by an OMNIS system.
- The status display lights up in green: The instrument is reserved by an OMNIS system and ready for operation.

2 Switching off the OMNIS main instrument

Press the on/off switch for 2 seconds until a single beep is heard.

- The status display goes out and the OMNIS main instrument is switched off.

6.3 Liquid sample presentation

CAUTION

Hot liquid sample presentation

Risk of burns due to contact with hot surfaces. The liquid sample presentation can reach temperatures of up to 85 °C.

- Do not touch metal parts of the liquid sample presentation.
- Wear personal protective equipment and heat-resistant protective gloves.

Sampling window

Special care must be taken with the sampling windows that are in the optical path. The liquid sample presentation contains 2 sampling windows. Cuvettes and flow-through cells also contain 2 sampling windows.

NOTICE

Scratched or destroyed sampling windows

Scratches, fingerprints, greasy deposits or other damage to the sampling windows can impair the performance of the instrument.

- Do not touch the sampling windows with your fingers.
- Keep the sampling windows free of liquids and other substances.
- Clean the sampling windows only as necessary.

Sample holders and sample vessels

Information on sample holders and sample vessels can be found on the Metrohm website *(see "Displaying the accessories", chapter 1.5, page 4)*.

NOTICE

Poor quality of the sample vessels

Destruction of the sample vessel due to heat, temperature changes or mechanical impact on the temperature sensor.

Liquid escapes.

- Use only original accessories.

6.3.1 Inserting and removing the sample holder

CAUTION

Hot sample holder

Burns to the skin due to contact with hot surfaces. The sample holder can reach temperatures of up to 85 °C.

- Hold the sample holder only by its handle.
- Do not place sample holders on flammable surfaces.
- Wear personal protective equipment and heat-resistant protective gloves.

The sample holder must be matched to the sample vessel to be used (vial, cuvette or flow-through cell).

Inserting the sample holder

1 Aligning the sample holder

- Hold the sample holder by the handle and rotate it so that the handle is at the back.

2 Inserting the sample holder

- Insert the sample holder vertically into the liquid sample presentation.

The sample holder snaps into place magnetically.

Removing the sample holder

The removal of the sample holder is blocked if the temperature sensor is located on the sample vessel.

Prerequisites:

- The measurement was completed correctly, the temperature sensor was moved away from the sample vessel.
- The sample vessel was removed from the sample holder.

1 Pulling out the sample holder

- Hold the sample holder by the handle and pull it vertically upwards.
- Place the sample holder on a non-flammable surface.

6.3.2 Inserting and removing the sample vessel

WARNING

Flammable substances on a hot surface

Risk of fire and burns if flammable substances are spilled. Samples, sample vials, sample holders and the sample presentation can reach temperatures of up to 85 °C.

- Avoid sources of ignition.
- Use protective grounding.
- Use exhaust equipment.
- Clean up spilled liquids and solids immediately.

CAUTION

Hot sample vials

Burns to the skin due to contact with hot surfaces or hot liquids. Samples, sample vials, sample holders and the sample presentation can reach temperatures of up to 85 °C.

- Wear personal protective equipment and heat-resistant protective gloves.
- Clean up spilled liquids and solids immediately.

6.3.2.1 Vial or cuvette

CAUTION

Spilled hazardous substances

Injuries and damage to health due to spillage of hazardous substances or breakage of the sample vessel.

- Close the sample vessels.
- Wear personal protective equipment (e.g. protective glasses, gloves).
- Remove and dispose of escaping substances in accordance with regulations.

CAUTION

Volume expansion of the sample due to heating

Injuries and damage to health due to overflowing or breakage of the sample vessel or due to the stopper being blown off.

- Fill the sample vessel only up to the minimum filling height of 2 cm. The liquid can expand in the remaining volume of air. Alternatively, use stoppers a with capillary bore.
- Press the stopper in gently so that the sample vessel is not damaged.

Inserting the vial or cuvette

Prerequisite:

- The sample holder matching the sample vessel is inserted *(see "Inserting and removing the sample holder", chapter 6.3.1, page 32)*.
- A disposable vial or a cleaned, undamaged cuvette is ready.

Cuvettes are fragile and must be handled with care.
Avoid scratching the polished sampling windows:

- Take care when inserting cuvettes into the sample holder.
- When filling solutions using a pipette, do not place the buret tip against a polished sampling window.
- Never use metal tweezers or forceps to carry or hold cuvettes.

1 Filling the sample vessel

- Fill the sample vessel with the sample.
  - The minimum filling height is **2 cm**, so that the light can penetrate the sample.
  - The maximum fill level is **1 cm** below the top edge of the glass.

2 Inserting the sample vessel

- Carefully insert the sample vessel into the sample holder.

Removing the vial or cuvette

NOTICE

Damage to the temperature sensor during temperature control on the sample vessel

If the sample vessel is removed while the sensor is in direct contact with the sample vessel, then the sensor may be damaged.

- Do not remove the sample vessel until the measurement is complete and the temperature sensor has been moved away from the sample vessel.

1 Removing the sample vessel from the holder

- Carefully pull the sample vessel vertically upwards.

2 Cleaning the sample vessel (cuvettes)

Do not treat the cuvette with ultrasound. Avoid extreme temperature changes.

- Empty and clean the cuvette immediately after the measurement.
- After cleaning, rinse the cuvette thoroughly with ultrapure water.
- Dry the cuvette. Blow off with clean air and allow to dry in a dust-free environment.

Do not leave the polished sampling windows in contact with liquids for long periods of time.
Store the cuvettes in cases. Do not store unprotected in a corrosive atmosphere.

6.3.2.2 Flow-through cell

CAUTION

Escaping hazardous substances

Escaping hazardous substances may result in injuries and damage.

- Use liquid-carrying components (tubing, pumps, vessels, etc.) in accordance with manufacturer specifications.
- Ensure that the components used are resistant to the substances to be transported.
- Check all components accessories for leakages and loose connections.
- Replace leaking components immediately.
- Remove and dispose of escaping liquids in accordance with regulations.
- For unsupervised operation with substances that are hazardous to health or flammable, the relevant national laws must be observed. Responsibility for safe operation lies with the plant operator.

NOTICE

Incorrect handling

Damage to the flow-through cell. The temperature resistance and pressure resistance of the flow-through cell are limited.

- Observe the user manual supplied with the flow-through cell.
- If the temperature of the sample holder is regulated, then observe the temperature resistance of the flow-through cell.

Inserting the flow-through cell

Prerequisite:

- The sample holder matching the sample vessel is inserted *(see "Inserting and removing the sample holder", chapter 6.3.1, page 32)*.
- A cleaned, undamaged cuvette flow-through cell is ready.

1 Connecting the flow-through cell

- Connect the flow-through cell in accordance with its user manual.

2 Inserting the flow-through cell

- Insert the flow-through cell into the sample holder so that the sampling windows of the flow-through cell are aligned with the openings of the holder.

Removing the flow-through cell

1 Removing the flow-through cell from the holder

- Carefully pull the flow-through cell vertically upwards.

Cleaning the flow-through cell

1 Cleaning the flow-through cell

- Clean the flow-through cell in accordance with its user manual.

6.4 Solid sample presentation

CAUTION

Optical radiation

Possible hazard to eyes and skin.

- Avoid exposure of eyes and skin to the invisible light beam.
- Do not look vertically into the light emission opening when the instrument is switched on.

Sampling window

Special care must be taken with the sampling window *(6-**4**)*.

NOTICE

Scratched or destroyed sampling windows

Scratches, fingerprints, greasy deposits or other damage to the sampling windows can impair the performance of the instrument.

- Do not touch the sampling windows with your fingers.
- Keep the sampling windows free of liquids and other substances.
- Clean the sampling windows only as necessary.

Sample holders and sample vessels

Information on sample holders and sample vessels can be found on the Metrohm website *(see "Displaying the accessories", chapter 1.5, page 4)*.

6.4.1 Inserting and removing the sample holder

The sample holder must be matched to the sample vessels to be used.
No sample holder is required for transflection.

Inserting the sample holder

1
- Place the sample holder on the guide grooves of the solid sample presentation.
- Rotate the sample holder until it engages magnetically.

Removing the sample holder

1
- Removing the sample holder.

6.4.2 Inserting and removing the sample vessel

CAUTION

Spilled hazardous substances

Injuries and damage to health due to spillage of hazardous substances or breakage of the sample vessel.

- Close the sample vessels.
- Wear personal protective equipment (e.g. protective glasses, gloves).
- Remove and dispose of escaping substances in accordance with regulations.

Inserting the sample vessel

Prerequisite:

- The sample holder matching the sample vessel is inserted *(see "Inserting and removing the sample holder", chapter 6.4.1, page 37)*.
- A cleaned sample vessel is ready.

1 Filling the sample vessel

- Fill the sample vessel with the sample. Minimum height **1 cm**. The glass bottom of the sample vessel must be completely covered to prevent measurement errors.

2 Inserting the sample vessel

- Insert the sample vessel into the sample holder.

Inserting the transflection vessel

Prerequisite:

- A cleaned transflection vessel is ready.

1 Filling the transflection vessel

- Place the sample in the transflection vessel. Fill in sufficient amount – recommended fill level 1 cm.
- Place the reflector into the sample. Avoid air pockets while doing so.

2 Inserting the transflection vessel

- Insert the transflection vessel into the round indentation of the solid sample presentation.

Removing the sample vessel/transflection vessel

1 Removing the sample vessel

- Remove the sample vessel.

2 Cleaning the sample vessel

- Clean and dry the sample vessel.
  Blow off the glass bottom with clean, dry air or nitrogen. Alternatively, carefully clean the glass bottom with a soft, lint-free cloth.
- Transflection: Clean and dry the reflector as well.

7 Maintenance

7.1 Cleaning

Clean the product at regular intervals to prevent malfunctions and to ensure a long service life.

WARNING

Health hazards from electrical potential.

Severe injuries with possibly fatal consequences.

- Operate the product only if it is in perfect condition. The housing must also be intact.
- Only use the product with the covers fitted.
- Protect live components (e.g. power supply unit, power cord, connection sockets) against moisture.
- Always have maintenance work and repairs on electrical components carried out by a regional Metrohm service representative.

WARNING

Chemical hazardous substances

Contact with aggressive chemical substances may cause poisoning or chemical burns.

- Wear personal protective equipment (e.g. protective glasses, gloves).
- Use exhaust equipment when working with vaporizing hazardous substances.
- Clean contaminated surfaces.
- Only use detergents that do not cause any unwanted side reactions with the materials to be cleaned.
- Dispose of chemically contaminated materials (e.g. cleaning material) in accordance with regulations.

NOTICE

Inward seepage of liquid into the instrument

Design measures have been implemented to ensure that inward seepage of liquid into the instrument is largely prevented. However, unplug the power plug immediately if you suspect that corrosive media have gotten inside the instrument. This is the only way to prevent extreme damage to the instrument electronics. Notify the regional Metrohm service representative.

Cleaning the sampling window

Clean the sampling windows of the liquid sample presentation *(4-**1**)* and the solid sample presentation *(6-**4**)* only if necessary.

Prerequisite:

- The product is switched off and disconnected from the energy supply.

Required accessories:

- Cleaning cloth (soft, lint-free), e.g. cleaning cloth for eyeglasses

1 Cleaning

- Blow off the sampling windows with clean, dry air or with nitrogen.
- Alternatively, carefully clean the sampling window with a soft, lint-free cloth.

2 Instrument performance tests

- Liquid sample presentation: Metrohm recommends cleaning the sampling windows before carrying out the instrument performance tests.
- Solid sample presentation: If external instrument performance tests are available, carry them out after cleaning the sampling window.

Cleaning the product surface

Prerequisite:

- The product is switched off and disconnected from the energy supply.

Required accessories:

- Cleaning cloth (soft, lint-free)
- Water or ethanol

NOTICE

Acetone attacks the plastic

Damage to the housing.

- Do not use solvents containing acetone to clean the housing.

1 Glass shards

- Carefully remove any glass splinters or other solids without damaging the sampling windows.

2 Cleaning the surface

- Clean the surface (with the exception of the sampling windows) with a damp cloth. Remove coarse contamination with ethanol.
- Liquid sample presentation: Clean the sample compartment (with the exception of the sampling windows) in the same way.

3 Drying the surface

- Wipe the surface (with the exception of the sampling windows) with a dry cloth.
- Liquid sample presentation: Dry the sample compartment (with the exception of the sampling windows) in the same way.

4 Drying the connectors

- Protect plug connections against contamination.
- Clean the connectors with a dry cloth.

Cleaning the sample holder and the solid-sample vessels

The sample holders and the solid sample vessels have a black anodized coating.
Do not clean these parts in a dishwasher. The anodized coatings could be destroyed.

Liquid sample presentation
If the sample holder is heavily contaminated, clean it in an ultrasonic bath.

Required accessories:

- Cleaning cloth (soft, lint-free)
- Water or ethanol

1 Cleaning the surface

- Clean the surface with a damp cloth. Remove coarse contamination with ethanol.

2 Drying the surface

- Wipe the surface with a dry cloth.

Liquid sample presentation: Rinse the drain tubing

Spilled liquids are guided from the sample compartment of the liquid sample presentation through the instrument in a controlled manner via drain tubing. The liquids then escape from underneath the instrument.

If liquids have entered the sample compartment of the liquid sample presentation, then the sample compartment and drain tubing must be rinsed as follows.

Prerequisite:

- The product is switched off and disconnected from the energy supply.

Required accessories:

- Cleaning cloth (soft, lint-free)
- Water or ethanol

1 Cleaning up liquids

- Clean up any escaping liquids that have leaked or spilled under the instrument immediately.

2 Rinsing the sample compartment and the drain tubing

- Rinse the sample compartment and drain tubing sufficiently. Pour the rinsing liquid into the sample compartment and collect it again under the instrument.

3 Drying the sample compartment

- Wipe the surface (with the exception of the sampling windows) with a dry cloth.
- Blow off the sampling windows with clean, dry air or with nitrogen.
- Alternatively, carefully clean the sampling window with a soft, lint-free cloth.

4 Contacting your regional Metrohm service representative

Contact your regional Metrohm service representative in the following cases:

- If hazardous substances have run through the drain tubing.
- In case of possible incompatibility of the spilled liquid with other substances.
- If corrosion is suspected in the tubing.
- If glass shards or other solids may have gotten into the tubing.

5 Instrument performance tests

- Liquid sample presentation: Metrohm recommends cleaning the sampling windows before carrying out the instrument performance tests.
- Solid sample presentation: If external instrument performance tests are available, carry them out after cleaning the sampling window.

7.2 Maintenance

Perform maintenance work on the product at regular intervals to prevent functional disruptions and to ensure a long service life.

- Metrohm recommends having the products maintained by the regional Metrohm service representative as part of an annual service. Shorter maintenance intervals may be necessary if you frequently work with caustic and corrosive chemicals.
- Only perform maintenance work that is described in this instruction. Contact your regional Metrohm service representative for further maintenance work and repairs. The regional Metrohm service representative offers every form of technical advice for maintenance and service of all Metrohm products.
- Only use spare parts that meet the technical requirements of the manufacturer. Original spare parts always meet these requirements.

7.2.1 Test and maintenance intervals

7.2.1.1 Instrument performance tests

The instrument performance tests must be performed regularly.

Task	OMNIS command	Recommended execution interval	Result
Wavelength test	**TEST WL**	Unregulated industry: Every 1 to 2 weeks (internal measuring mode) Regulated industry: ▪ Daily: Internal measuring mode ▪ Weekly: External measuring mode	Wavelength accuracy and precision are within the stipulated tolerance.

Task	OMNIS command	Recommended execution interval	Result
Noise test	**TEST NOISE**	Unregulated industry: Every 1 to 2 weeks (internal measuring mode) Regulated industry: ▪ Daily: Internal measuring mode ▪ Weekly: Low flux test and high flux test	The noise is within the stipulated tolerance.
Photometric linearity	**TEST PHOTOMETRIC LINEARITY**	Regulated industry: Weekly	The photometric linearity is within the stipulated tolerance.

If a test fails:

- For liquid sample presentation: Check the sampling windows for contamination and clean if necessary. *(see "Cleaning the sampling window", page 40)*
- Check the operating hours of the lamp module. Replace the lamp if necessary. *(see "Replacing the lamp", chapter 7.2.2, page 45)*
- Repeat the instrument performance tests.
  - If the wavelength test fails, repeat the wavelength calibration. If the wavelength test fails again, contact your regional Metrohm service representative.
  - If the noise test fails, contact your regional Metrohm service representative.
  - If the photometric linearity test fails, contact your regional Metrohm service representative.

7.2.1.2 Wavelength calibration

After certain actions, a wavelength calibration for the instrument must be carried out in the OMNIS Software.

Task	OMNIS command	Recommended execution interval	Result
Wavelength calibration	**CAL WL** and **VAL WL**	After replacement of hardware components. After prolonged transport of the instrument.	The x-axis of the spectrum is calibrated.

7.2.1.3 Instrument maintenance

Instrument maintenance must be performed regularly.

Task	Execution interval	Result
Maintenance by the regional Metrohm service representative	Annually. If necessary, more often.	The instrument continues to correspond to the technical specifications. Filter mats are checked and replaced if necessary. The internal wavelength standard is recertified.

Recertify external reference standards

If reference standards are used for external instrument performance tests, then these standards must be recertified periodically.

- Observe the next recommended calibration date on the certificate.

7.2.2 Replacing the lamp

The lamp is used as a light source for the NIR wavelength range. The following reasons may lead to the lamp being replaced:

- The lamp is no longer functional.
- The instrument performance tests have failed.

Prophylactic replacement before or at the end of the service life is also possible. The lamp has a service life of 8,000 hours.

A spare lamp is available as **lamp OMNIS NIR**, article number **6.07410.000**, from your regional Metrohm representative.

- Metrohm recommends keeping spare lamps in stock.
- Use only original lamps OMNIS NIR in the instrument.

Clean the instrument before replacing the lamp to protect the reflector from dust.

Overview

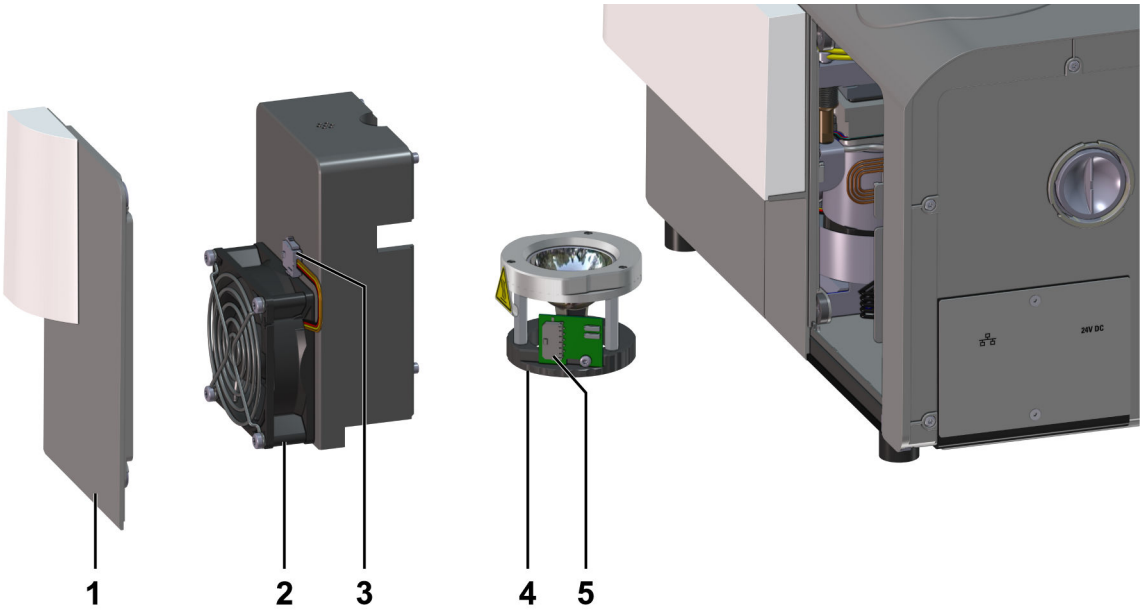

1	**Side plate**	**2**	**Lamp housing with fan**
3	**Plug connector in the fan cable**	**4**	**Lamp**
5	**Panel plug**		

The side plate (**1**), the lamp housing (**2**) and the lamp (**4**) are magnetically attached and can be removed and installed without tools.

Removing the lamp

WARNING

Optical radiation

Risk group 3 according to EN 62471: 2006

Eye damage and skin injuries.

- Do not open the side plate (**1**) during operation.
- Before replacing the lamp, disconnect the instrument from the energy supply.

CAUTION

Hot lamp parts

Risk of burns due to contact with hot lamp parts.

- After switching off the instrument, wait 30 minutes to allow the lamp parts to cool down.
- If it is absolutely necessary to remove a lamp that has not cooled down sufficiently, wear heat-resistant protective gloves.

1 Disconnecting the instrument from the energy supply

- Switch off the instrument.
- Disconnect the power cord.

2 Removing the side plate

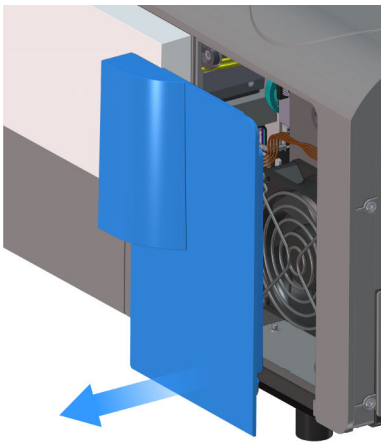

- Grip the side plate (orange arrow).
- Remove the side plate.

3 Allowing the lamp to cool down

- Wait 30 minutes to allow the lamp parts to cool down.

4 Loosening the fan cable

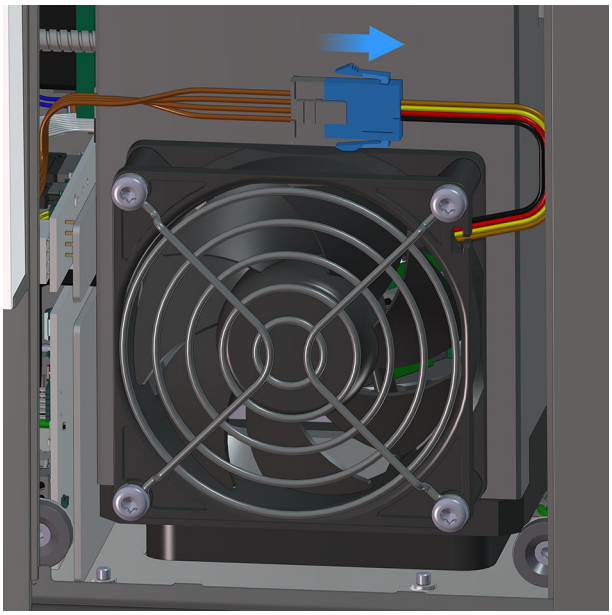

- Loosen the plug connection in the middle of the fan cable.
  - Press the lock button on the plug connection.
  - Disconnect the two parts of the plug connection at the same time.

5 Pulling out the lamp housing

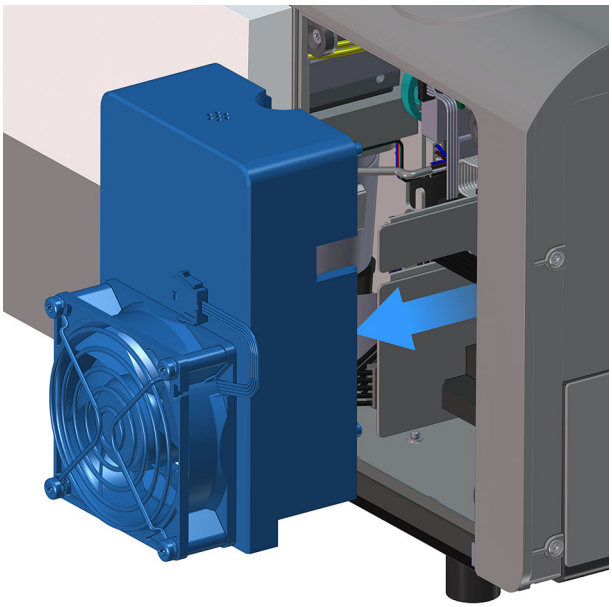

- Pull out the lamp housing with fan and place it next to the instrument.

6 Pulling out the lamp

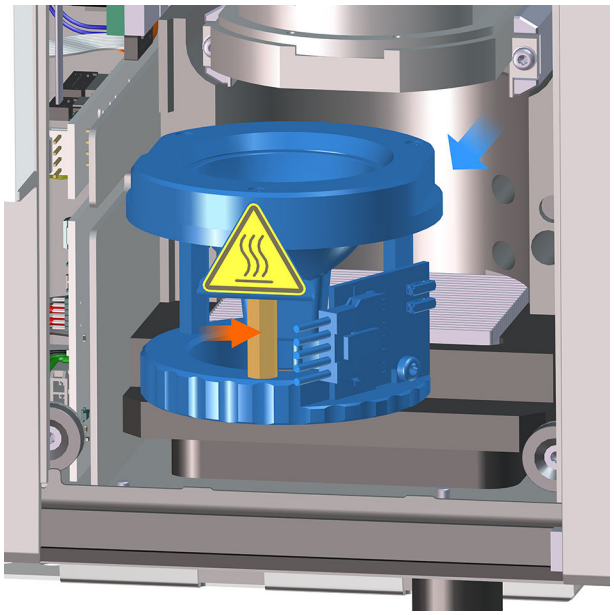

- Hold the lamp by the front spacer (red arrow) and pull it out of the instrument.

7 Loosening the lamp cable

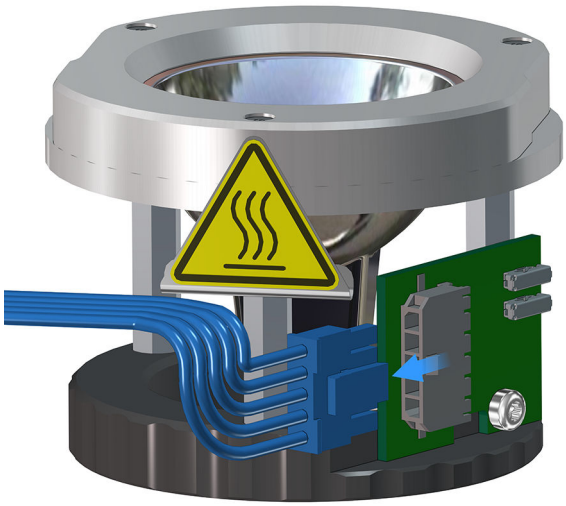

- Loosen the black lamp cable (colored blue in the picture) from the lamp:
  - Hold the lamp by the black plastic ring.
  - Press the lock button of the coupling.
    At the same time, disconnect the coupling and the panel plug from one another.

Installing the lamp

NOTICE

Fingerprints on the reflector

The radiation characteristics of the reflector can be impaired by fingerprints and greasy deposits.

- Do not touch the parabolic reflector with your fingers.

Prerequisite:

- The instrument is switched off and disconnected from the energy supply.

1 Connecting the lamp cable to the lamp

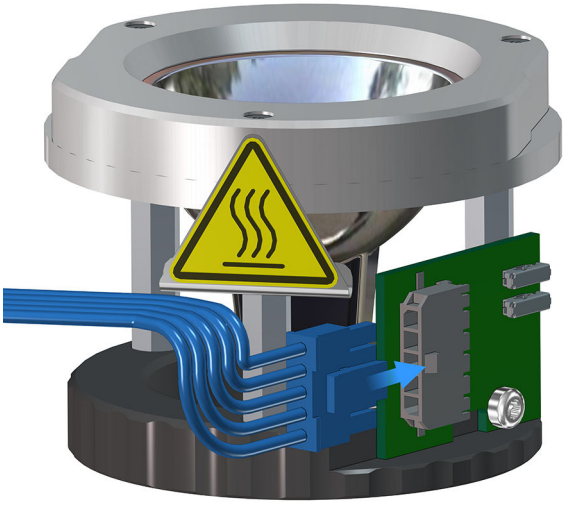

- Connect the black lamp cable (colored blue in the picture) to the lamp:
  - Connect the coupling and panel plug to one another.
    The coupling must snap in.

2 Inserting the lamp

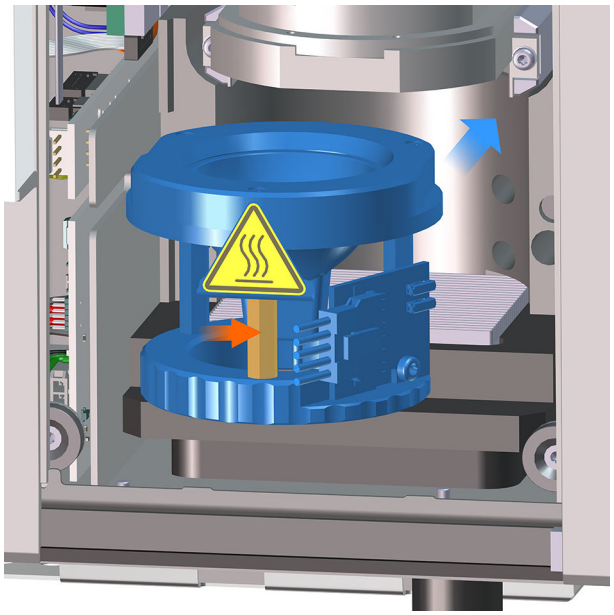

- Align the lamp so that the black plastic ring is at the bottom and the printed circuit board is on the right (i.e. towards the rear of the instrument).
  - Hold the lamp by the front spacer.
  - Insert the lamp. The magnets must snap in.

3 Inserting the lamp housing

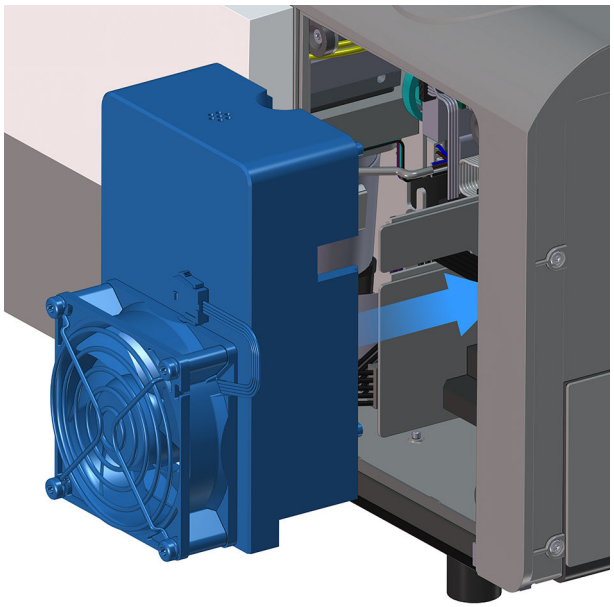

- Ensure that the black lamp cable is positioned in the recesses in both the sheet metal and the printed circuit board.

- Hold the colored fan cable to the left to create space for inserting the lamp housing.
- Position the lamp housing and slide it to the rear. Ensure that the black lamp cable is positioned in the recess in the lamp housing.
- Check for tight fit.

4 Connecting the fan cable

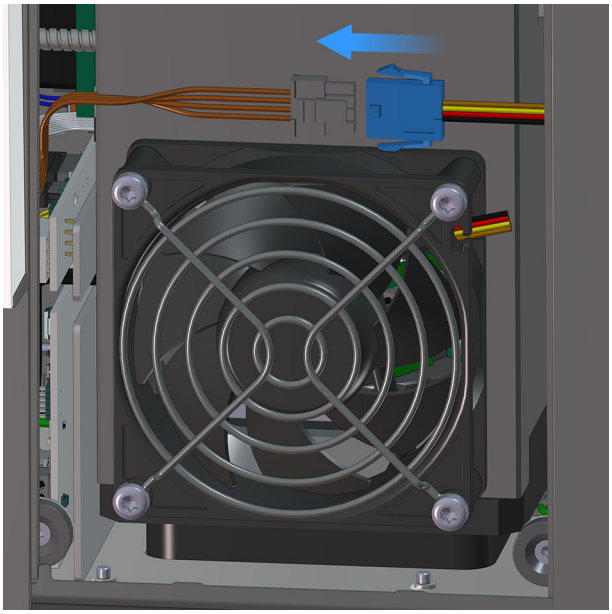

- Plug together the two parts of the plug connection in the fan cable.
- Position the fan cable above the fan.

5 Attaching the side plate

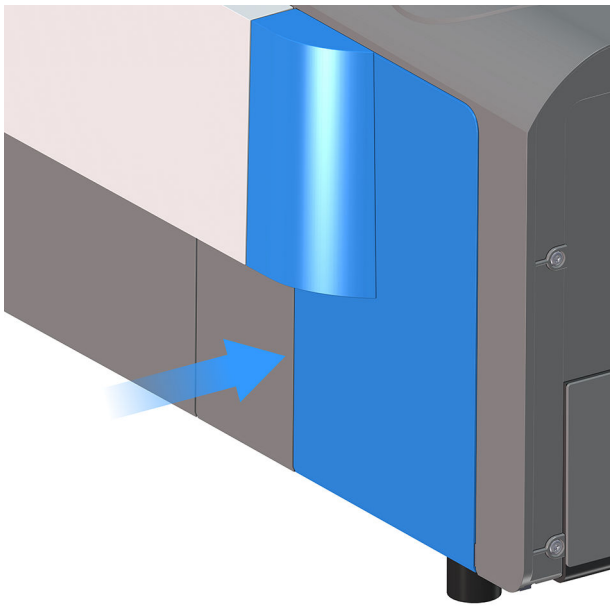

- Attach the side plate. The magnets must snap in.

6 Wavelength calibration and instrument performance test

- Plug in the power cord and switch on the instrument.
- Observe the waiting time for warming up.
- Perform the wavelength calibration and the instrument performance test in the OMNIS Software.

Metrohm recommends waiting 1 hour after switching on the instrument before starting a wavelength calibration.

8 Troubleshooting

Messages on malfunctions and errors are displayed in the control software or in the embedded software (e.g. on the display of an instrument) and contain the following information:

- Descriptions of causes of malfunctions (e.g. jammed drive)
- Descriptions of problems with the control (e.g. missing or invalid parameter)
- Information on how to solve the problem

System components with status display elements also indicate malfunctions and errors with a red flashing LED.

Troubleshooting on the product is often only possible with the control software or the embedded software (e.g. initializing, moving to a defined position).

See also

System – Signals (chapter 3.3, page 20)

8.1 Forcing a shutdown

Prerequisite:

The OMNIS main instrument cannot be switched off.

1. Press the on/off switch for 8 seconds until the acoustic signal is heard in short intervals.

   The acoustic signal sounds for 2 seconds. The status display goes out and the OMNIS main instrument is switched off.

9 Disposal

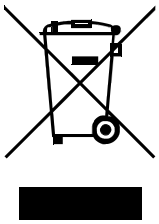

Properly dispose of chemicals and of the product to reduce negative effects on the environment and public health. Local authorities, waste disposal companies or dealers provide more detailed information on disposal. Observe the WEEE EU directive (WEEE = Waste Electrical and Electronic Equipment) for the proper disposal of waste electronic equipment within the European Union.

10 Technical specifications

10.1 Ambient conditions

Nominal function range	+5 to +40 °C	Maximum relative humidity, non-condensing: 100% up to a temperature of 25 °C, decreasing thereafter: 85% at 30 °C 65% at 35 °C 50% at 40 °C
Storage	+5 to +40 °C	Maximum relative humidity, non-condensing: See nominal function range
Altitude / Pressure range	max. 3,000 m. above sea level / min. 700 mbar	
Overvoltage category	II	
Pollution degree	2	

10.2 Energy supply

External power supply unit

Input

Nominal voltage range	100–240 V AC
Frequency range	47–63 Hz
Current	max. 3 A

Outlet

Nominal voltage	24 V DC (± 5%)
Current	9.58 A
Power output	230 W

Device

Input

Nominal voltage	24 V DC
Power consumption	170 W

Protection

Internal fuse	T4A	cannot be replaced by the user unprotected up to 24 V power switch, overcurrent protection is used by the power supply unit

10.3 Measurements and weight

Measurements

Width	360 mm
Height	235 mm
Depth	425 mm

Weight	18.2 kg

10.4 Housing

Material

Housing	PC-ABS	Polycarbonate + Acetonitrile butadiene styrene
Back panel	1.4301	Stainless steel
Base	1.4301	Stainless steel
Front foils	PET	Poly(ethylene terephthalate), mat
Liquid sample presentation		
Aluminum parts (incl. sample holders)	ALTEF® coating	Aluminum oxide layer with PTFE inclusion
Drain tubing	Silicone	
Seal	PTFE	Polytetrafluoroethylene
Solid sample presentation		
Instrument aluminum parts	ALTEF® coating	Aluminum oxide layer with PTFE inclusion
Aluminum parts accessories	Aluminum, anodized	
Seal	EPDM	Ethylene propylene diene rubber

Lamp safety

Solid sample presentation	Risk group 0	according to EN 62471

IP degree of protection

Housing	IP54	
External power supply unit	IP20	

10.5 Connectors

External power supply unit		via power connection
Socket		IEC 60320, type C14, 10 A
Power cord		
Length	max. 2 m	
Number of conductors	3	with protective ground
Conductor cross-section	min. 0.75 mm^2 / 18 AWG	
Plug		
Instrument side		IEC 60320, type C13, 10 A
Building side		country-specific
Power In		
Socket		Plug 6-pin
Ethernet	LAN	Local Area Network
Type	Ethernet CAT 6	
Socket	RJ45	shielded
Cable type	min. F/FTP	shielded
Cable length	max. 10 m	

10.6 Display specifications

Status display	LED	multi-colored

10.7 Operation

Key	On/Off

10.8 Spectrometer specifications

NIR specifications		
Wavelength range	1,000–2,250 nm	
Detector	3TE Cooled InGaAs Diode Array	
Minimum integration time	0.02 ms	
Speed of the data collection	<10 s	Typical, single measurement
Calibration		Internal
		Thermostatized spectrometer
		Temperature-corrected calibration
Light source		
Nominal voltage	12 V DC	
Power consumption	50 W	
Lamp	Tungsten halogen	
Service life of the lamp	>8,000 h	
Reference material	SRM2035b	NIST traceable filter
Temperature control (liquid sample presentation)		
Target temperature	25–80 °C	not lower than 5.0 K below ambient temperature

Display resolution	0.1 K
Accuracy of the temperature sensors	< 0.5 K

Flow-through cell

For technical specifications, see user manual supplied with the flow-through cell.